PEDROLLO

MADE IN ITALY

DATA SHEET

Submersible Borehole Pumps

6SR44

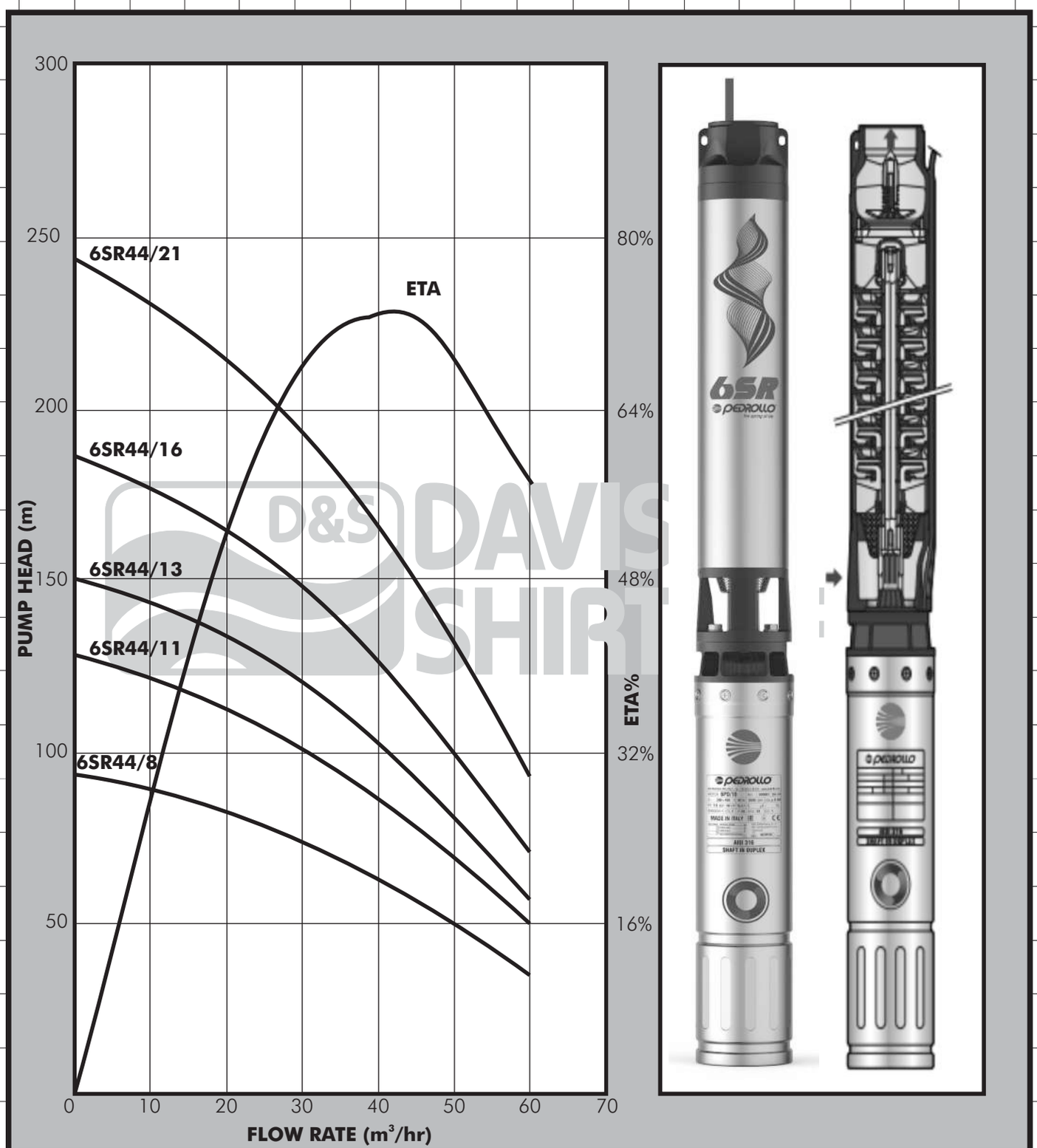

D&S DAVIS SHIRT

PUMP

Pedrollo 6SR44 submersible pumps are specifically designed for supply from boreholes, though can also be used in other submersible applications in either vertical or horizontal configuration. They feature a hydraulic design that incorporates floating impellers which together with especially resistant component materials provide high resistance to sand content in the pumped water.

The pump impellers and diffusers are made from technopolymer while the stage casings, top housing, suction connector, pump sleeve and shaft are made of AISI 304 stainless steel. The pump is supplied with a 4m tail cable.

MOTOR

Pumps are coupled to a two pole sealed motor constructed principally from stainless steel. Motors require a remote direct in-line starter and if irregular electrical supply is prevalent an additional quick tripping multi function protection relay is recommended.

Enclosure Class : IP68 ***Insulation Class***: F ***Speed:*** 2900rpm ***Voltage:*** 3x415V

OPERATING CONDITIONS

Pumped Liquid: Thin, clean, chemically non aggressive liquids with a maximum sand content of 100gm/m^3.

Max. Liquid Temperature: +35^{0}C

Max. Immersion Depth: 200m

Min. Borehole Diameter: 200mm

PUMP DATA

Model	Motor		Current (A)	DN (”)	Dimensions(mm)		Weight (Kg)
	kW	HP	3x415V		H1	H2	
6SR44/8	11	15	24	3	1275	826	32
6SR44/11	15	20	32		1613	894	40
6SR44/13	18.5	25	39		1839	959	45
6SR44/16	22	30	47		2178	1116	54
6SR44/21	30	40	64		2743	1243	63

© Davis & Shirtliff 2019. Contents herein are not warranted. The right is reserved to amend specifications without notice.

PD467A-07/22

KENYA
Nairobi - Head Office
Tel: (254 20) 6968000
headoffice@dayliff.com
Nairobi - Westlands
Tel: (254 20) 4446011/6
westlands@dayliff.com
Nairobi - Downtown
Tel: (254) 715 439 392
downtown@dayliff.com
Eastleigh
Tel: (254) 711 079 645
eastleigh@dayliff.com
Utawala
Tel: (254) 780 575745
utawala@dayliff.com
Nairobi - Karen
Tel: (254 20) 3883513
karen@dayliff.com
Ongata Rongai
Tel: (254 20) 2400146
ongatarongai@dayliff.com
Kiambu
Tel: (254) 701 646 309
kiambu@dayliff.com
Thika
Tel: (254 67) 2220084
thika@dayliff.com
Kitengela
Tel: (254 45) 3123094
kitengela@dayliff.com
Machakos
Tel: (254 44) 2021668
machakos@dayliff.com
Kitui
Tel: (254) 701 683 289
kitui@dayliff.com
Embu
Tel: (254) 780 455 512
embu@dayliff.com
Meru
Tel: (254 64) 3131033
meru@dayliff.com
Nanyuki
Tel: (254 62) 2030018
nanyuki@dayliff.com
Garissa
Tel: (254 46) 2102620
garissa@dayliff.com
Naivasha
Tel: (254 50) 2030510
naivasha@dayliff.com
Lodwar
Tel: (254 724) 248692
lodwar@dayliff.com
Eldoret
Tel: (254 53) 2061306
eldoret@dayliff.com
Nakuru
Tel: (254 51) 2213248
nkroffice@dayliff.com
Narok
Tel: (254) 701 683 289
narok@dayliff.com
Kakamega
Tel: (254 56) 2031889
kakamega@dayliff.com
Bungoma
Tel: (254) 740 048 514
bungoma@dayliff.com
Kisumu
Tel: (254 57) 2024763
ksmoffice@dayliff.com
Kisii
Tel: (254 58) 2030949
kisii@dayliff.com
KENYA COAST
Mombasa - Main Office
Tel: (254 20) 2040432
mombasa@dayliff.com
Mombasa - Downtown
Tel: (254) 780 567 379
mombasadowntown@dayliff.com
Malindi
Tel: (254 42) 2120425
mldoffice@dayliff.com
Diani
Tel: (254 40) 3202181
dianioffice@dayliff.com
Lamu
Tel: (254 20) 2651052/56
lamu@dayliff.com
Nyali
Tel: (254 20) 2443357
nyali@dayliff.com
Voi
Tel: (254 20) 2028284
voi@dayliff.com
Mtwapa
Tel: (254) 798 478 113
mtwapa@dayliff.com
UGANDA
Kampala - Main Office
Tel: (256 414) 346337/8
kampala@dayliff.com
Kampala - Nakasero
Tel: (256 392) 734633
nakasero@dayliff.com
Kampala - Shauri Yako
Tel: (256 414) 660 770
shauriyako@dayliff.com
Gulu
Tel: (256 471) 433041
gulu@dayliff.com
Mbarara
Tel: (256 753) 940 080
mbarara@dayliff.com
Jinja
Tel: (256 392) 001556
jinja@dayliff.com
SOUTH SUDAN
Juba
Tel: (211 956) 397 070
juba@dayliff.com
TANZANIA
Dar es Salaam - Main Office
Tel: (255 22) 2112515/6
daressalaam@dayliff.com
Dar es Salaam - Kariakoo
Tel: 2184867
kariakoo@dayliff.com
Arusha
Tel: (255 27) 2547317/8
arusha@dayliff.com
Zanzibar
Tel: (255 24) 2234660/1
zanzibar@dayliff.com
Mwanza
Tel: (255 28) 2541971/2
d&smwanza@dayliff.com
Dodoma
Tel: (255) 753 506 503
dodoma@dayliff.com
ZAMBIA
Lusaka - Main Office
Tel: (260 211) 288010/1
lusaka@dayliff.com
Lusaka - ChaChaCha
Tel: (260 211) 842350
Ndola
Tel: (260 212) 610936/7
ndola@dayliff.com
Kitwe
Tel: (260 212) 221747/67
kitwe@dayliff.com
Livingstone
Tel: (260 213) 320002/234
livingstone@dayliff.com
Solwezi
Tel: (260 218) 821822
solwezi@dayliff.com
RWANDA
Kigali
Tel: (250) 252 504039
kigali@dayliff.co.rw
Rubavu
Tel: (243) 814 911999
rubavu@dayliff.com
ETHIOPIA (Associate)
Addis Ababa
Tel: (251 11) 5159341/44
ethiopia@dayliff.com
DRC
Lubumbashi
Tel: (243) 978 115412/ 852 758553
drc@dayliff.com

www.davisandshirtliff.com Davis & Shirtliff @dayliff