Euroswim

Swimming Pool Pumps

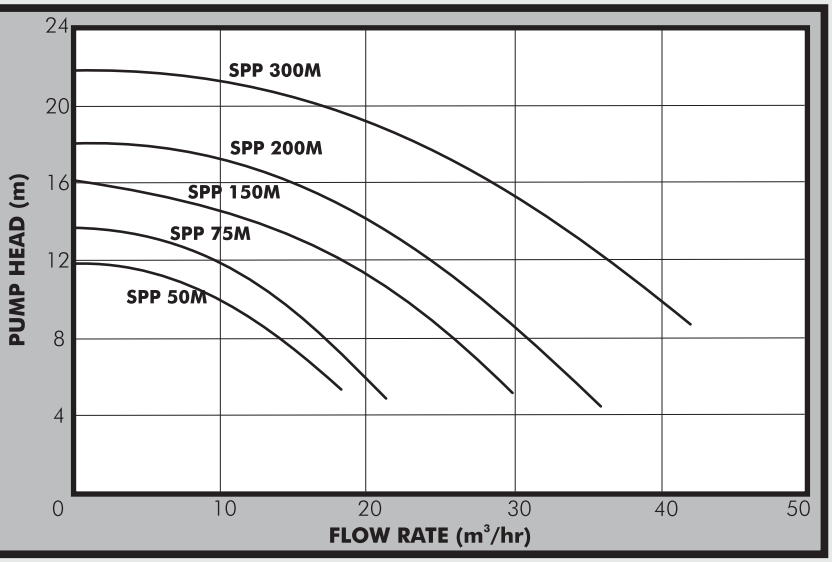

PUMPS

DAB EUROSWIM pool pump are specially designed using the latest technology, materials and components for all domestic and small size institutional swimming pool applications. Features include a large pre-filter with see through lid, an ultra silent (67dBA) high efficiency motor and reinforced inlet and outlet ports. All pump components are made from corrosion resistant technopolymer plastic reinforced with glass fibre for long life and durability.

MOTOR

The pump incorporates a TEFC motor with in-built thermal overload protection. The motor can be connected directly to mains power supply through a fuse or MCB.

Enclosure Class: IP55 ***Voltage:*** 1x240V ***Insulation Class:*** F ***Speed:*** 2800rpm

OPERATING CONDITIONS

Pumped liquid: Thin, clean, chemically non aggressive liquids without solids or fibres.
Maximum Fluid Temperature: +60°C
Maximum Ambient Temperature: +50°C
Maximum Operating Pressure: 10 bar

PUMP DATA

Model	Power (kW)	Current (A)	Dimensions (mm)									Weight (kg)
			DN (")	A	B	E	F	G	H	H1	H2	
Euroswim SPP 50M	0.33	4.2	2	542	300	265	220	150	317	222	314	11
Euroswim SPP 75M	0.5	5		559	300	265	220	150	317	222	314	12
Euroswim SPP 150M	1.1	7		581	311	274	220	150	353	258	350	12
Euroswim SPP 200M	1.5	8.6		655	311	274	220	150	353	258	350	20
Euroswim SPP 300M	2.2	12		648	311	274	220	150	387	258	350	24

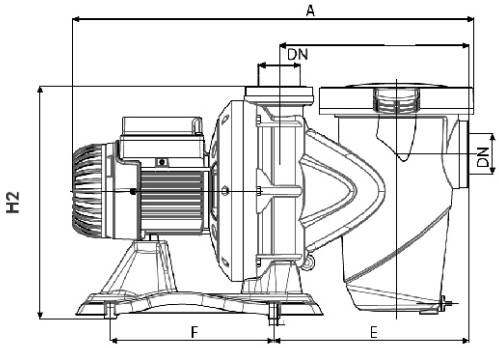

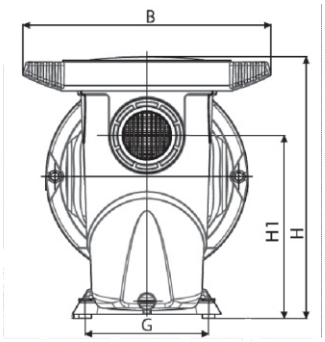

D&S DAVIS & SHIRTLIFF